1465L Series

4" Heavy Commercial
Thermally Improved Blind Window

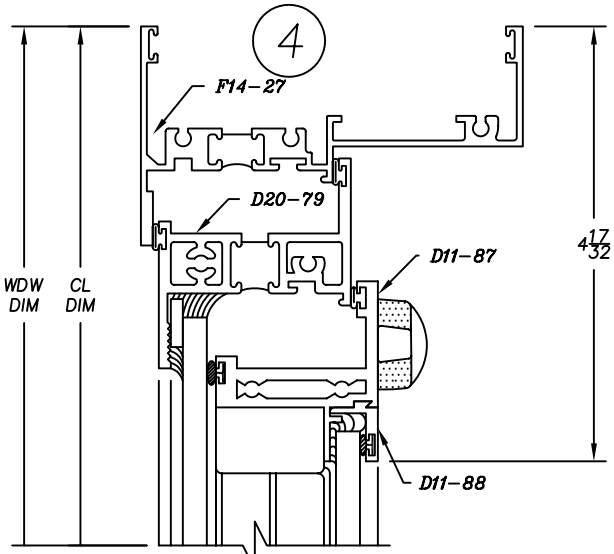

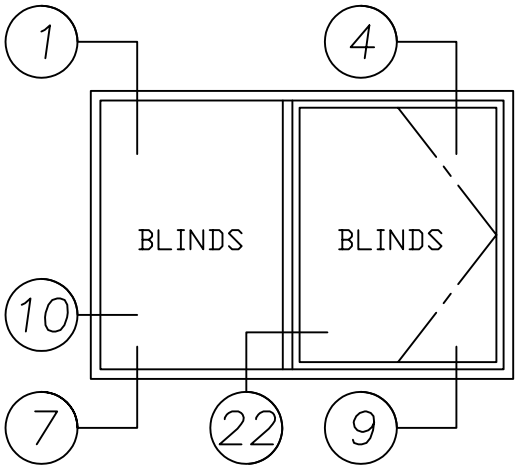

Fixed/Right Hand In-Swing Casement

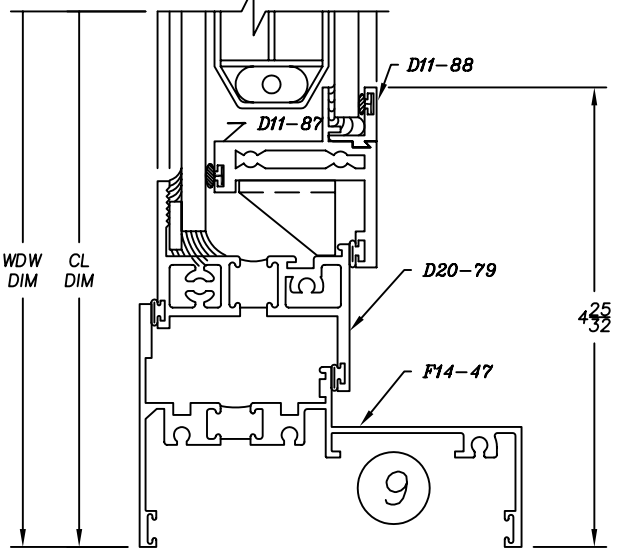

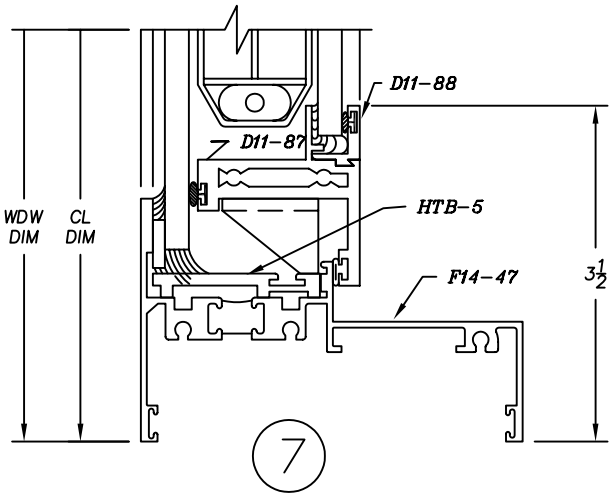

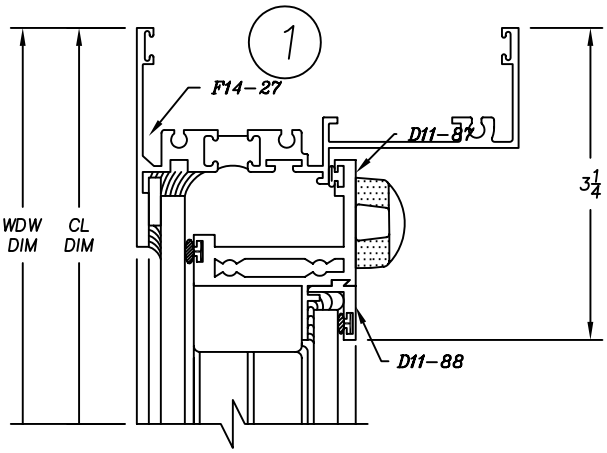

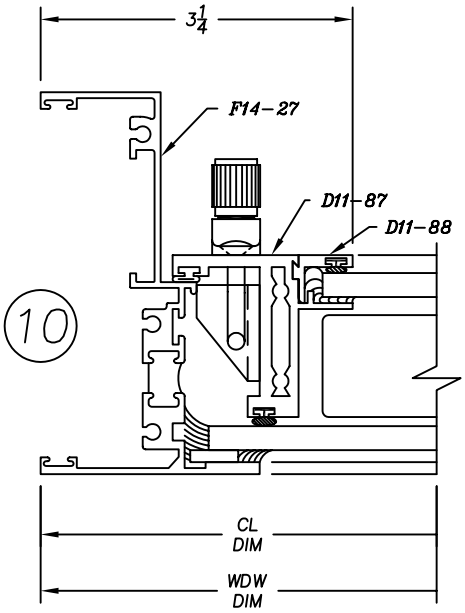

1465L Series

4" Heavy Commercial
Thermally Improved Blind Window

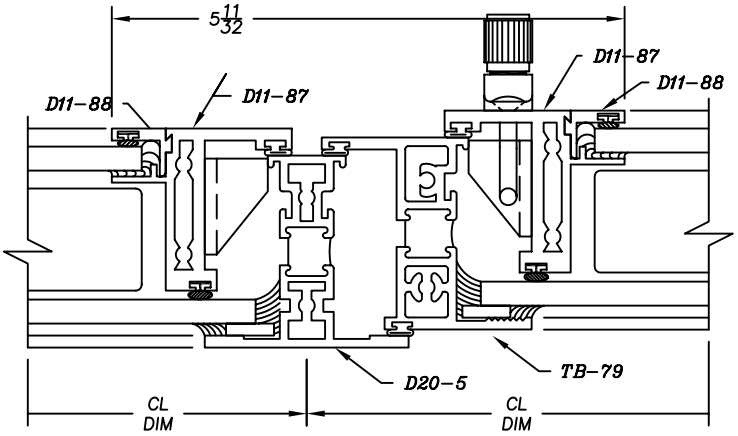

22

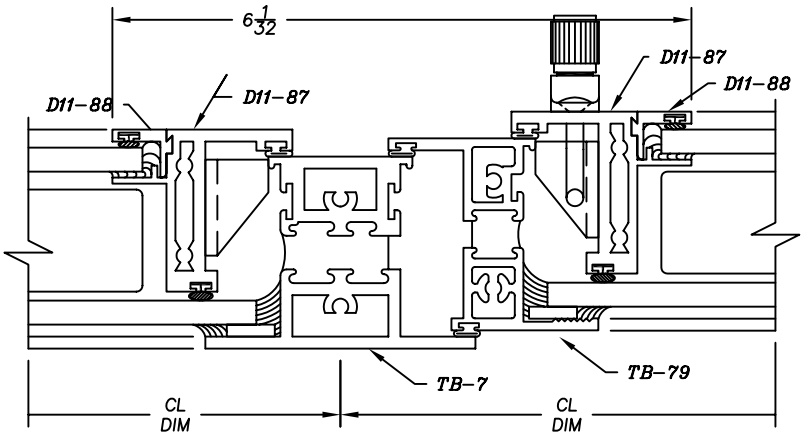

22

HEAVY RAIL

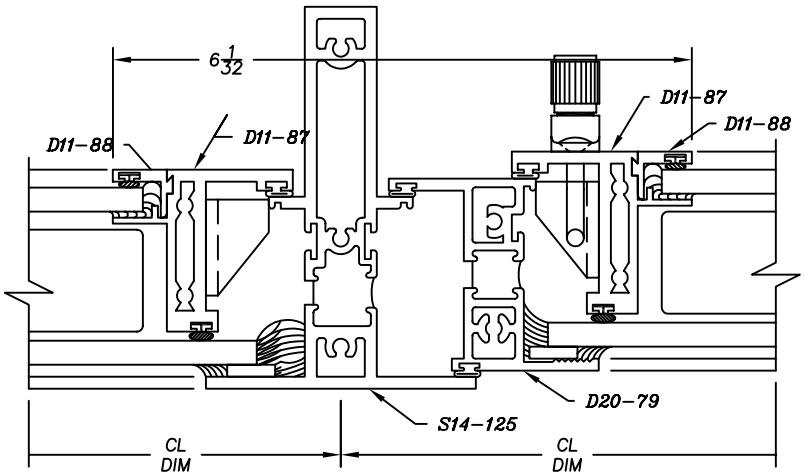

22