2265 Series

2" Heavy Commercial
Thermally Improved Blind Window

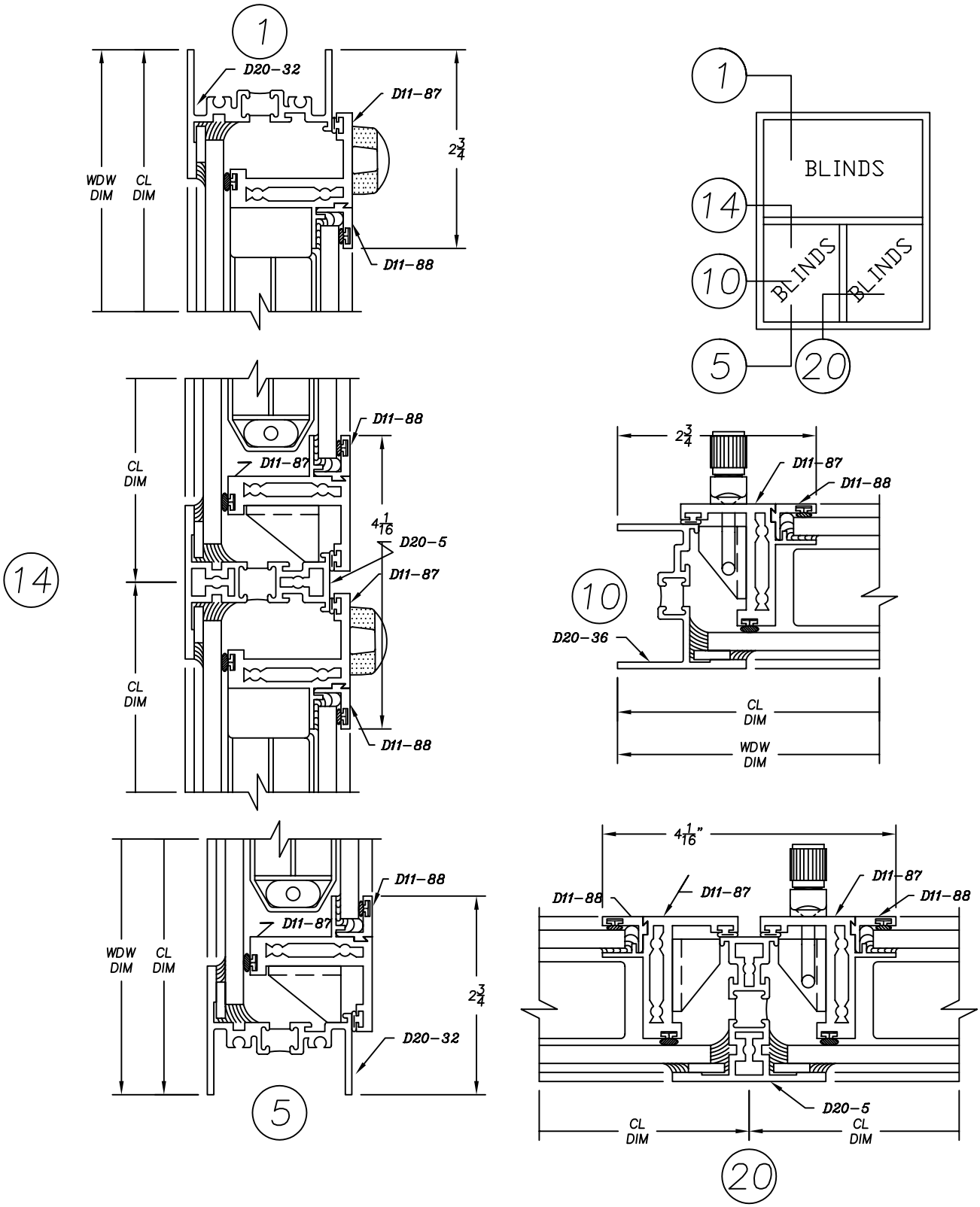

2265 Series
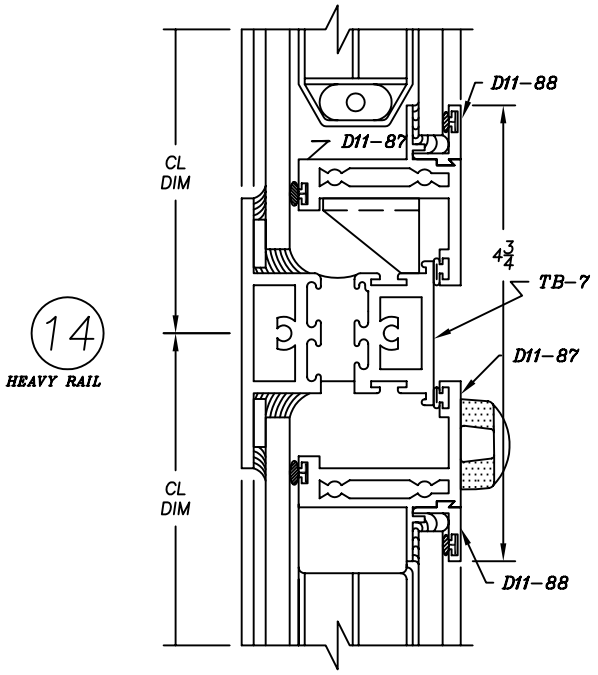
2" Heavy Commercial
Thermally Improved Blind Window