WINCO

3410 Series
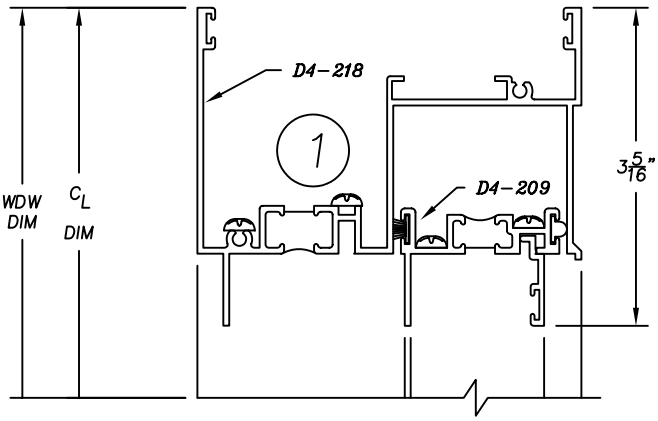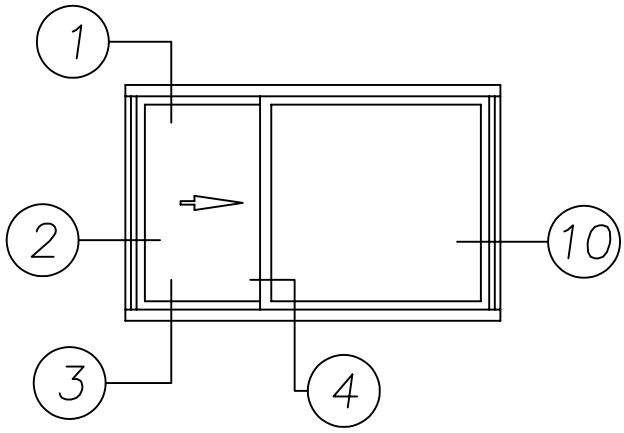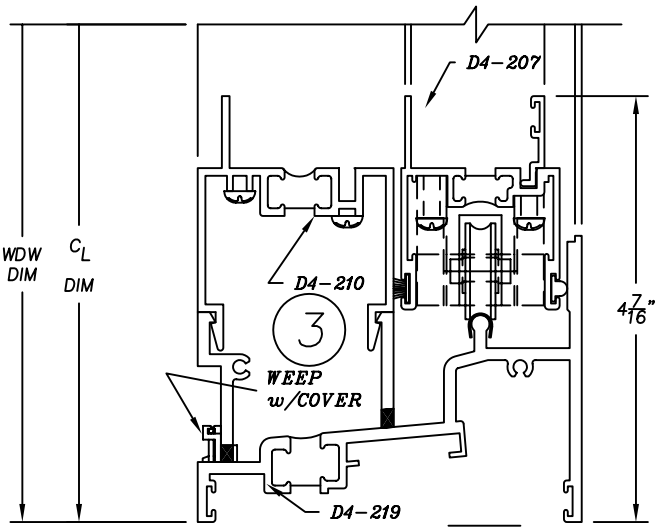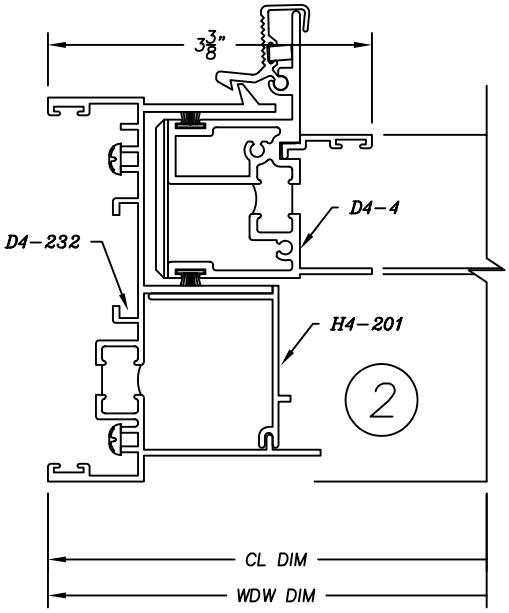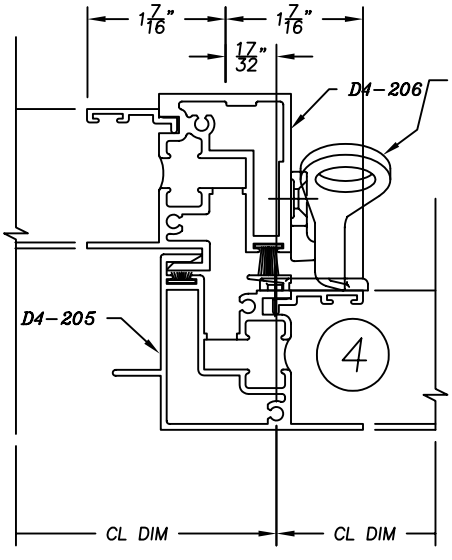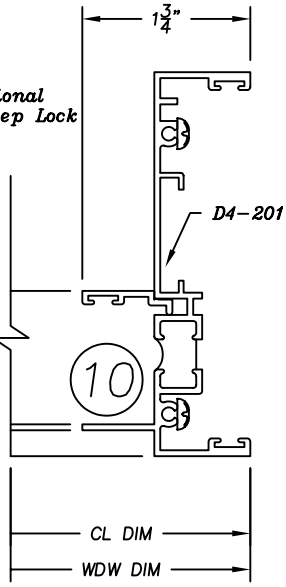
4" Heavy Commercial
Thermally Improved Single Slider