4400 Series
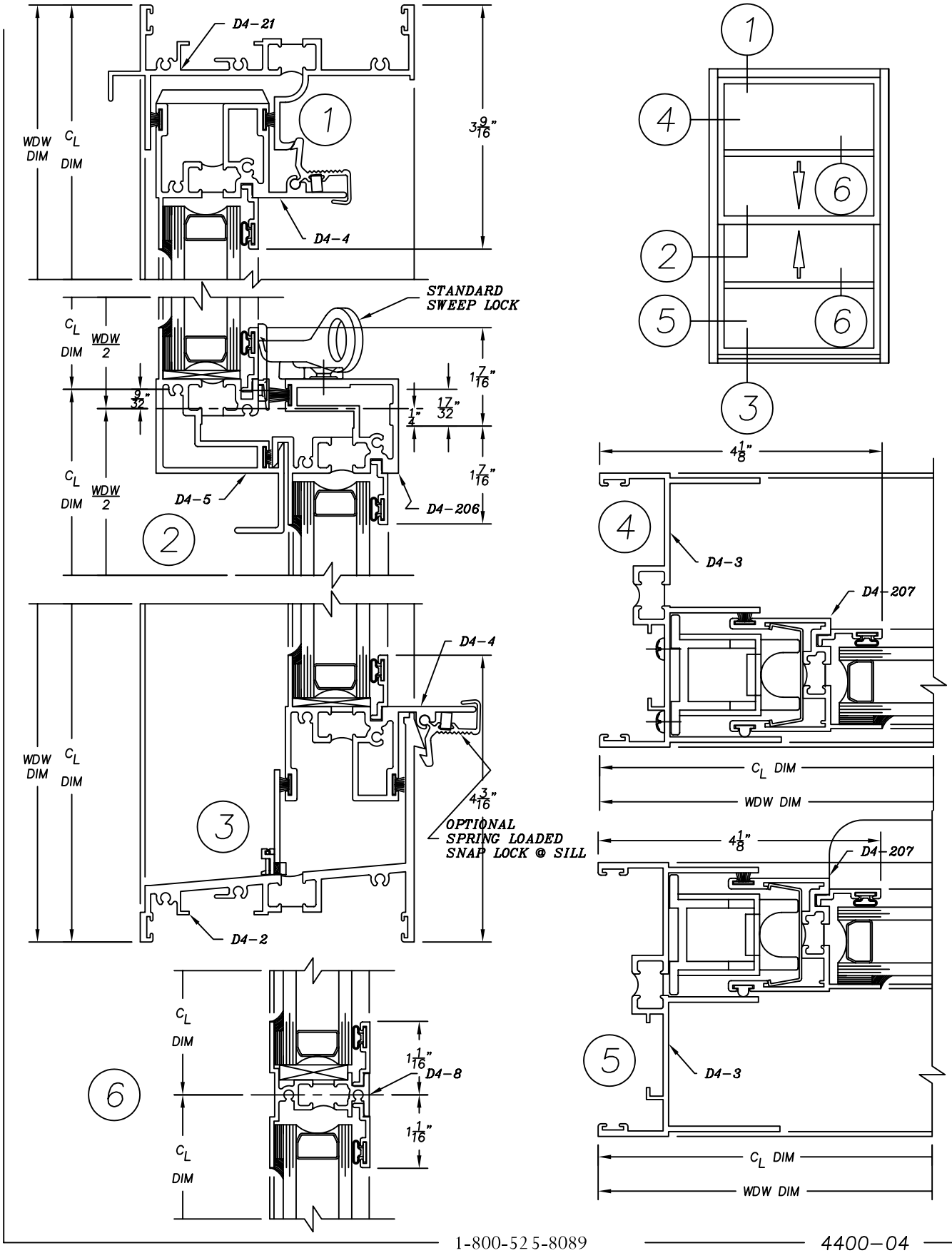
4" Heavy Commercial
Thermally Improved Double Hung Window