WINCO

4500 Series
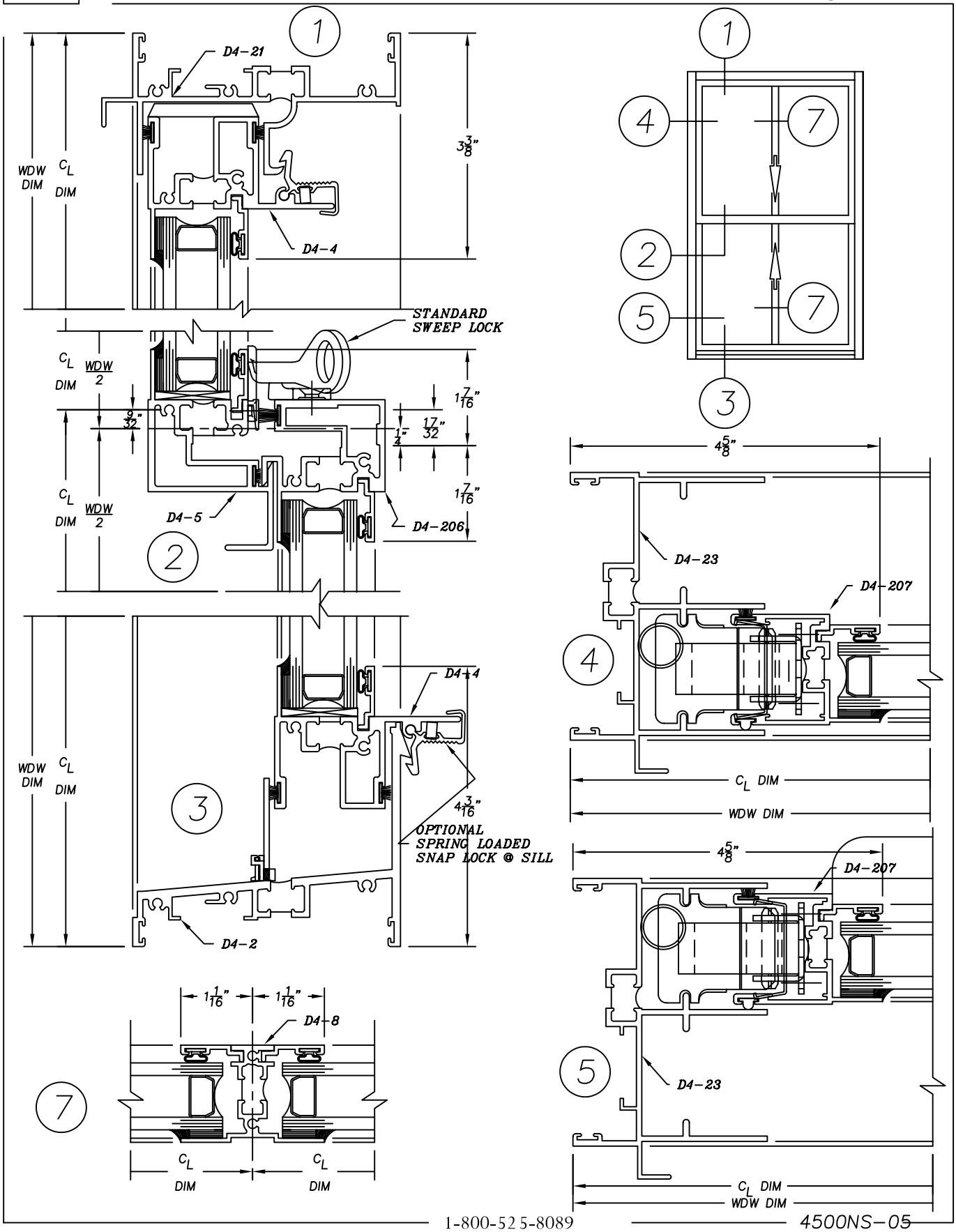
4-1/2" Heavy Commercial
Thermally Improved Double Hung Window